Spare Parts Diagram
Wallboard Sheet Lifter PL-3350

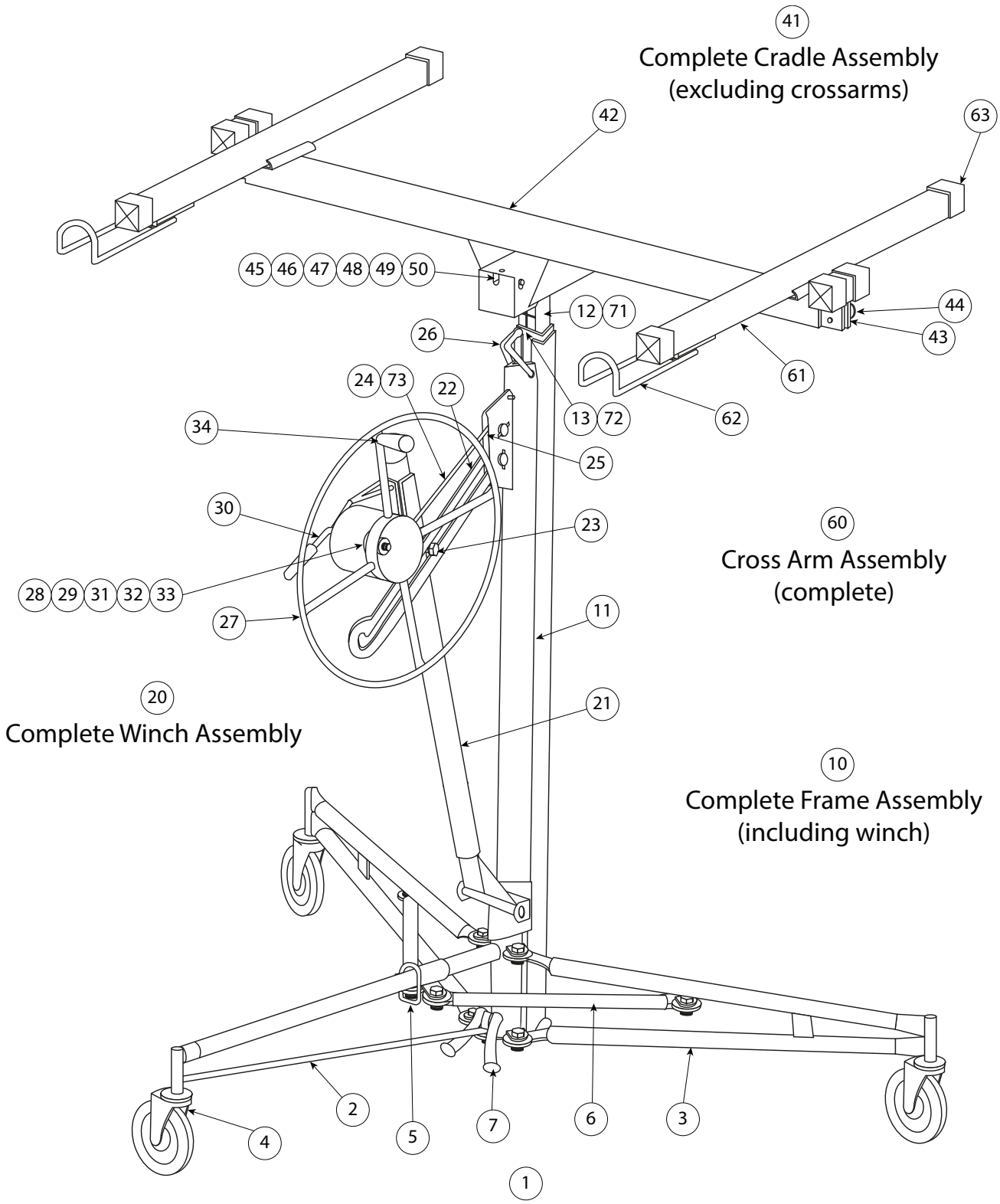

Use only genuine Wallboard parts on Wallboard Sheet Lifter. Using other brands parts on Wallboard Sheet Lifters may effect the operation of the product and void warranty.